PART NUMBER 0841911

Flasher Control - Model 6310

PRODUCT INFORMATION

Description	12-24V Flasher Control
Height	60.71 mm / 2.39 in
Width	109.47 mm / 4.31 in
Depth	31.75 mm / 1.25 in
Housing Material	Polycarbonate
Housing Color	Black
Mounting Type	Low Profile Mount
Connector or Wiring	9" Bare Leads
Product Weight	0.42 lbs / 0.19 kgs
Shipping Weight	3.83 lbs / 1.74 kgs



PRODUCT DIMENSIONS

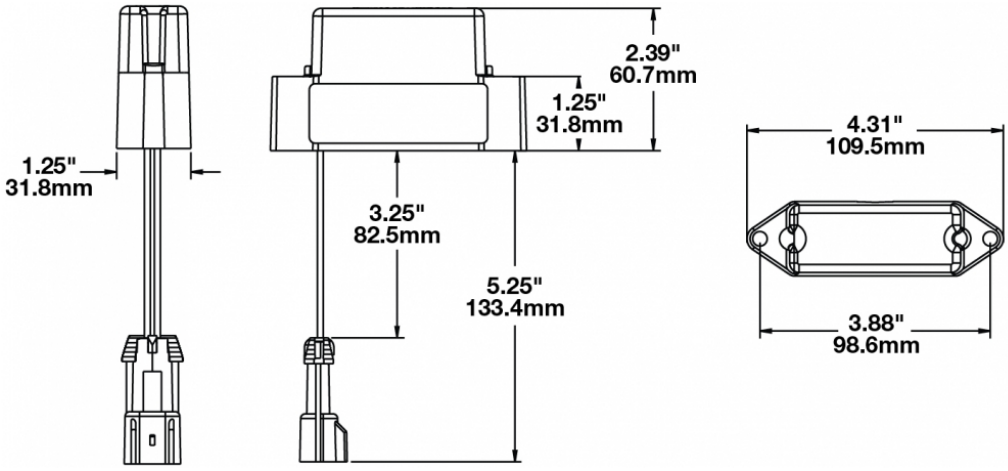

ELECTRICAL SPECIFICATIONS

Input Voltage	12-24V DC
Current Draw	15A @ 12V DC

Print date: 2026-11-27

© 2026 J.W. Speaker Corporation • Germantown, WI U.S.A.

www.jwspeaker.com • speaker@jwspeaker.com • 262.251.6660

J.W. SPEAKER® Engineered. Lighting. Solutions.

PART NUMBER 0841911

Flasher Control - Model 6310

REGULATORY STANDARDS COMPLIANCE



Buy America Standards MIL-STD 461

PHOTOMETRIC SPECIFICATIONS

Flash Rate 1	70 +/- 10 fpm

APPLICATIONS



PRODUCT WARNINGS

For California residents:
⚠ **WARNING:** Cancer and reproductive harm - www.P65Warnings.ca.gov.
⚠ **AVERTISSEMENT:** Cancer et effet nocif sur la reproduction - www.P65Warnings.ca.gov.

© 2026 J.W. Speaker Corporation • Germantown, WI U.S.A.
www.jwspeaker.com • speaker@jwspeaker.com • 262.251.6660

J.W. SPEAKER® Engineered. Lighting. Solutions.