PART NUMBER 0841291

Flasher Control Module - Model 6309

PRODUCT INFORMATION

Description	12-80V Flasher Control Module
Height	28.70 mm / 1.13 in
Width	111.00 mm / 4.37 in
Depth	33.27 mm / 1.31 in
Housing Material	Polycarbonate
Mounting Type	Low Profile Mount
Minimum Operating Temperature	-40 °C / -40 °F
Maximum Operating Temperature	65 °C / 149 °F
Connector or Wiring	9" Bare Leads
Product Weight	0.16 lbs / 0.07 kgs
Shipping Weight	2.39 lbs / 1.08 kgs

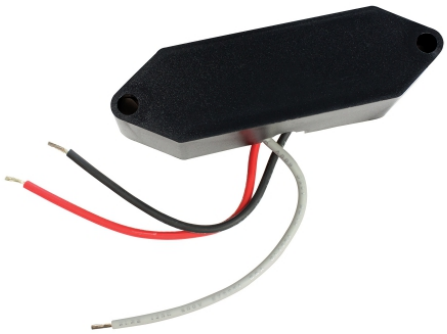

PRODUCT DIMENSIONS

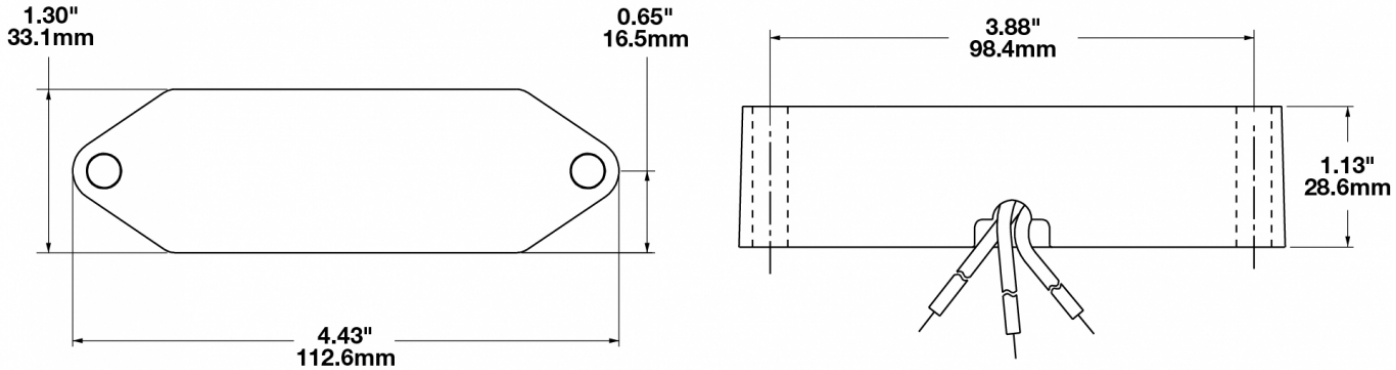

Print date: 2026-11-24
© 2026 J.W. Speaker Corporation • Germantown, WI U.S.A.
www.jwspeaker.com • speaker@jwspeaker.com • 262.251.6660

J.W. SPEAKER® Engineered. Lighting. Solutions.

PART NUMBER 0841291

Flasher Control Module - Model 6309

ELECTRICAL SPECIFICATIONS

Input Voltage	12-80V DC
Current Draw	5A @ 12V DC 5A @ 24V DC 5A @ 36V DC 5A @ 48V DC 5.00A @ 60V DC 5.00A @ 80V DC

REGULATORY STANDARDS COMPLIANCE



Buy America Standards
MIL-STD 461
IEC IP67
UL Recognized

PHOTOMETRIC SPECIFICATIONS

Flash Rate 1	70 +/- 10 fpm

APPLICATIONS



PRODUCT WARNINGS

For California residents:
⚠ **WARNING:** Cancer and reproductive harm - www.P65Warnings.ca.gov.
⚠ **AVERTISSEMENT:** Cancer et effet nocif sur la reproduction - www.P65Warnings.ca.gov.

Print date: 2026-11-24
© 2026 J.W. Speaker Corporation • Germantown, WI U.S.A.
www.jwspeaker.com • speaker@jwspeaker.com • 262.251.6660

J.W. SPEAKER®
Engineered. Lighting. Solutions.