PART NUMBER 1603971

LED Compact Work Light - Model 792

PRODUCT INFORMATION

Description	36-80V LED Compact Work Light with Panel Mount
Height	82.06 mm / 3.23 in
Width	98.80 mm / 3.89 in
Depth	43.40 mm / 1.71 in
Shape	Rectangular
Outer Lens Material	Polycarbonate
Outer Lens Color	Clear
Housing Material	Aluminum
Housing Color	Black
Mounting Type	Panel
Minimum Operating Temperature	-40 °C / -40 °F
Maximum Operating Temperature	65 °C / 149 °F
Mating Connector	JAE Connector MX19A003S51 harness included with flying leads
Product Weight	0.40 lbs / 0.18 kgs
Shipping Weight	7.19 lbs / 3.26 kgs



MODEL 792

PRODUCT DIMENSIONS

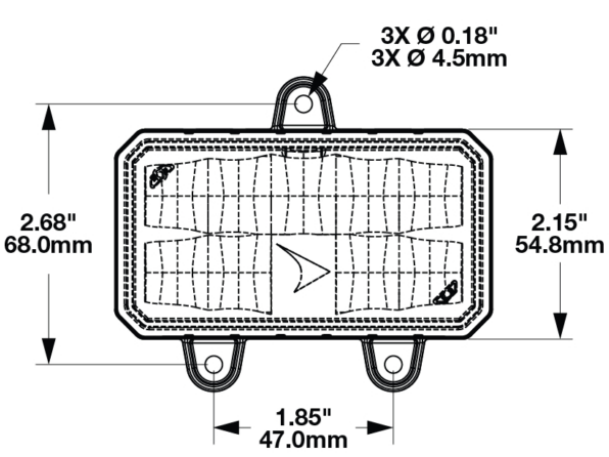

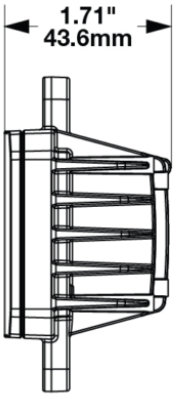

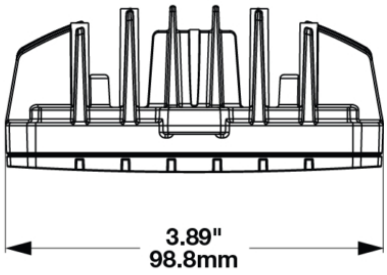

Print date: 2026-11-24

© 2026 J.W. Speaker Corporation • Germantown, WI U.S.A.

www.jwspeaker.com • speaker@jwspeaker.com • 262.251.6660

J.W. SPEAKER® Engineered. Lighting. Solutions.

PART NUMBER 1603971

LED Compact Work Light - Model 792

ELECTRICAL SPECIFICATIONS

Input Voltage	36-80V DC
Operating Voltage	30-95V DC
Transient Spike Protection	330V Peak @ 1 HZ-100 Pulses
Red Wire	Power
Black Wire	Ground
Current Draw	0.75A @ 36V DC (Power) 0.56A @ 48V DC (Power) 0.34A @ 80V DC (Power)

REGULATORY STANDARDS COMPLIANCE



Buy America Standards
IEC IP67

Eco Friendly
IEC IP69K

PHOTOMETRIC SPECIFICATIONS

Raw Lumen Output	3630
Effective Lumen Output	2000
Candela Output	2900
Nominal LED Color Temperature	5050 K

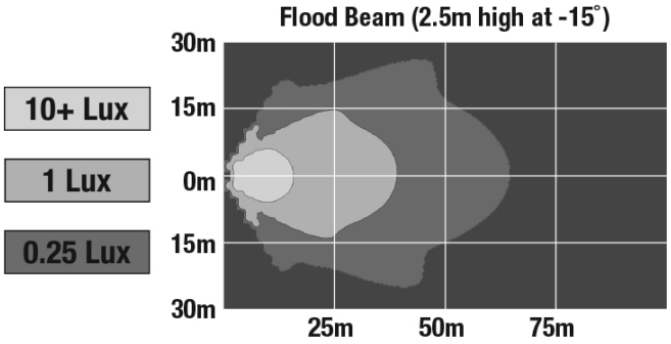

© 2026 J.W. Speaker Corporation • Germantown, WI U.S.A.
www.jwspeaker.com • speaker@jwspeaker.com • 262.251.6660

J.W. SPEAKER®
Engineered. Lighting. Solutions.

PART NUMBER 1603971

LED Compact Work Light - Model 792

APPLICATIONS



PRODUCT WARNINGS

For California residents:
⚠ **WARNING:** Cancer and reproductive harm - www.P65Warnings.ca.gov.
⚠ **AVERTISSEMENT:** Cancer et effet nocif sur la reproduction - www.P65Warnings.ca.gov.

ACCESSORIES



Part Number 8201241
DIN Pole Mount for Work Lights

© 2026 J.W. Speaker Corporation • Germantown, WI U.S.A.
www.jwspeaker.com • speaker@jwspeaker.com • 262.251.6660

J.W. SPEAKER® Engineered. Lighting. Solutions.

LED Compact Work Light - Model 792

RELATED PRODUCTS



Part Number 1603921
12-24V LED Compact Work Light with Pedestal Mount



Part Number 1603931
36-80V LED Compact Work Light with Pedestal Mount



Part Number 1603932
36-80V LED Compact Work Light with Pedestal Mount (BULK with Harness)



Part Number 1603951
12-24V LED Compact Work Light with Panel Mount



Part Number 1604241
12-24V LED Anti-Glare, 590Nm, Eco-Friendly Work Light with Pedestal Mount and Harness

Print date: 2026-11-24
© 2026 J.W. Speaker Corporation • Germantown, WI U.S.A.
www.jwspeaker.com • speaker@jwspeaker.com • 262.251.6660

J.W. SPEAKER® Engineered. Lighting. Solutions.