PART NUMBER 0555061

7" Round LED Motorcycle Headlights - Model 8790 Adaptive 2

PRODUCT INFORMATION

Description	12V DOT/ECE LED High & Low Beam Adaptive Headlight with Chrome Inner Bezel and Mounting Ring
Height	177.20 mm / 6.98 in
Width	177.20 mm / 6.98 in
Depth	93.68 mm / 3.69 in
Shape	Round
Outer Lens Material	Polycarbonate
Outer Lens Color	Clear
Housing Material	Aluminum
Housing Color	Grey
Bezel Color	Chrome
Retrofits	Bucket 7" Round Headlights (PAR56)
Minimum Operating Temperature	-40 °C / -40 °F
Maximum Operating Temperature	65 °C / 149 °F
Connector or Wiring	H4
Mating Connector	H4 AMP#172615-2
Product Weight	4.10 lbs / 1.86 kgs
Shipping Weight	4.10 lbs / 1.86 kgs



8790 ADAPTIVE 2

Print date: 2026-11-25

© 2026 J.W. Speaker Corporation • Germantown, WI U.S.A.

www.jwspeaker.com • speaker@jwspeaker.com • 262.251.6660

J.W. SPEAKER® Engineered. Lighting. Solutions.

7" Round LED Motorcycle Headlights - Model 8790 Adaptive 2

PRODUCT DIMENSIONS

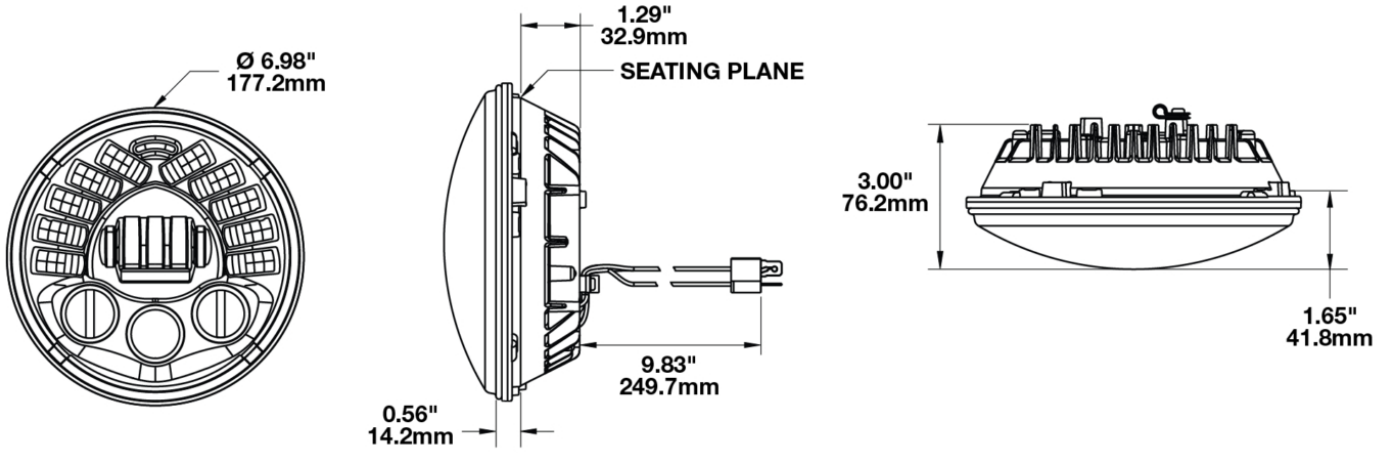

ELECTRICAL SPECIFICATIONS

Input Voltage	12V DC
Operating Voltage	9-16V DC
Transient Spike Protection	150V Peak @ 1 HZ-100 Pulses
Black Wire	Ground
White Wire	High Beam
Yellow Wire	Low Beam
Red Wire	Front Position
Current Draw	2.9A @ 13.5V DC (High Beam) 1.9A @ 13.5V DC (Low Beam) 0.092A @ 13.5V DC (Front Position) 3.5A @ 13.5V DC (Low Beam at Full Lean) 4.5A @ 13.5V DC (High Beam at Full Lean)

Print date: 2026-11-25
© 2026 J.W. Speaker Corporation • Germantown, WI U.S.A.
www.jwspeaker.com • speaker@jwspeaker.com • 262.251.6660

J.W. SPEAKER® Engineered. Lighting. Solutions.

PART NUMBER 0555061

7" Round LED Motorcycle Headlights - Model 8790 Adaptive 2

REGULATORY STANDARDS COMPLIANCE

ECE Reg 113
FMVSS 108 s10.1 (Table XX)
ECE Reg 50
IEC IP67

PHOTOMETRIC SPECIFICATIONS

Raw Lumen Output	2,250 (High Beam); 2,025 (Low Beam)
Effective Lumen Output	1,150 (High Beam); 850 (Low Beam)
Candela Output	48,000 (High Beam); 11,500 (Low Beam)
Nominal LED Color Temperature	5000 K
Beam Pattern(s)	Forward Lighting - High Beam (DOT/ECE) Forward Lighting - Low Beam (DOT/ECE) Signalization - Front Position

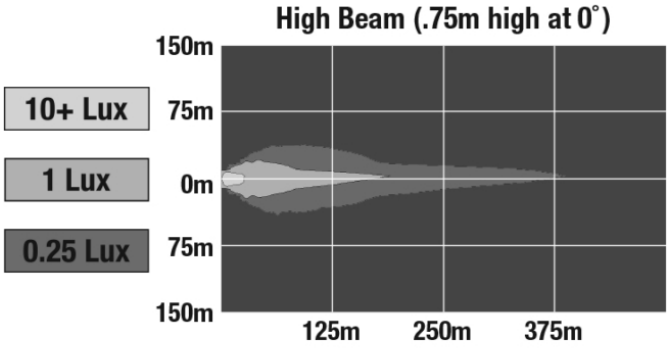

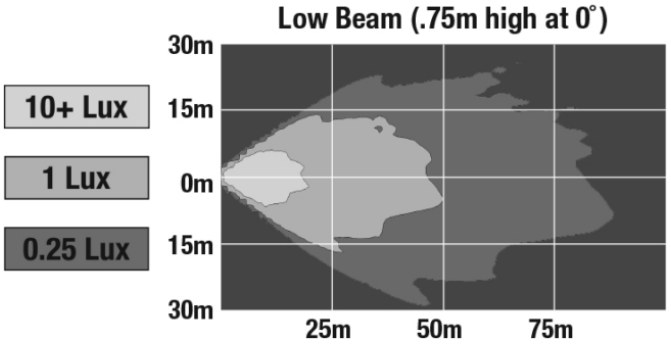

© 2026 J.W. Speaker Corporation • Germantown, WI U.S.A.
www.jwspeaker.com • speaker@jwspeaker.com • 262.251.6660

PART NUMBER 0555061

7" Round LED Motorcycle Headlights - Model 8790 Adaptive 2

APPLICATIONS

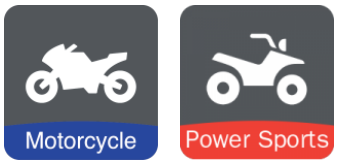

ADDITIONAL INFORMATION

Improvements over the original Adaptive Series
The NEW Adaptive 2 Series headlights have been improved to feature Adaptive technology when using the high beam, in addition to the low beam. Providing ditch-to-ditch lighting to eliminate dark corners on sharp turns and a punch of light 1,500 feet down the road to give you a safer and more confident ride.
Red Wire
Note about Front Position: The front position light is a requirement outside the United States. **If your bike is operated in the United States you do NOT need to connect this wire (red)** unless your bike is equipped with a front position light.

PRODUCT WARNINGS

For California residents:
⚠ **WARNING:** Cancer and reproductive harm - www.P65Warnings.ca.gov.
⚠ **AVERTISSEMENT:** Cancer et effet nocif sur la reproduction - www.P65Warnings.ca.gov.

ACCESSORIES



Part Number 3156351
Mounting Ring Kit for 7" Round (PAR56) Headlights

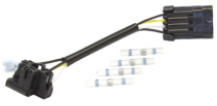

Part Number 8200411
Wire Harness for 7" Motorcycle Headlights

Print date: 2026-11-25
© 2026 J.W. Speaker Corporation • Germantown, WI U.S.A.
www.jwspeaker.com • speaker@jwspeaker.com • 262.251.6660

J.W. SPEAKER® Engineered. Lighting. Solutions.

7" Round LED Motorcycle Headlights - Model 8790 Adaptive 2

RELATED PRODUCTS



Part Number 0555011
12V DOT/ECE LED High & Low Beam Adaptive Headlight with Black Inner Bezel



Part Number 0555031
12V DOT/ECE LED High & Low Beam Adaptive Headlight with Chrome Inner Bezel



Part Number 0555051
12V DOT/ECE LED High & Low Beam Adaptive Headlight with Black Inner Bezel and Mounting Ring

© 2026 J.W. Speaker Corporation • Germantown, WI U.S.A.
www.jwspeaker.com • speaker@jwspeaker.com • 262.251.6660

J.W. SPEAKER® Engineered. Lighting. Solutions.