PART NUMBER 8001621

Pedestal Mounting Bracket for Model 93 Double Lamp

PRODUCT INFORMATION

Description	Pedestal Mounting Bracket for Model 93 Double Lamp
Product Weight	0.47 lbs / 0.21 kgs
Shipping Weight	0.77 lbs / 0.35 kgs



© 2026 J.W. Speaker Corporation • Germantown, WI U.S.A.
www.jwspeaker.com • speaker@jwspeaker.com • 262.251.6660

PART NUMBER 8001621

Pedestal Mounting Bracket for Model 93 Double Lamp

PRODUCT DIMENSIONS

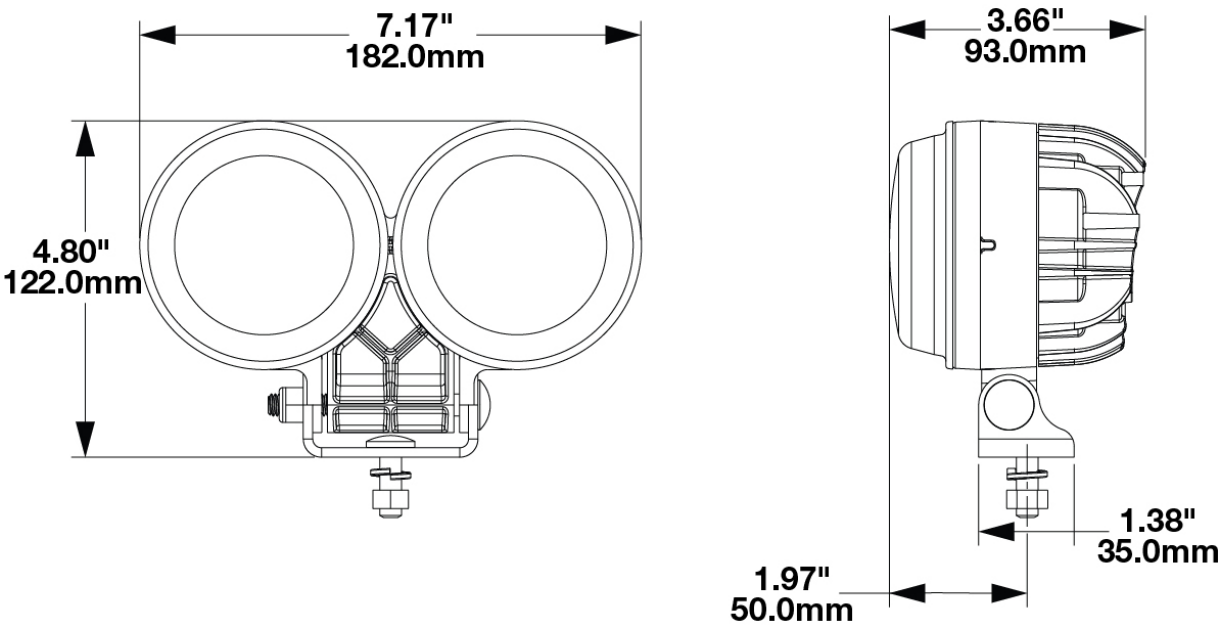

REGULATORY STANDARDS COMPLIANCE



Buy America Standards

Eco Friendly

APPLICATIONS



Print date: 2026-11-27

© 2026 J.W. Speaker Corporation • Germantown, WI U.S.A.

www.jwspeaker.com • speaker@jwspeaker.com • 262.251.6660

J.W. SPEAKER® Engineered. Lighting. Solutions.

PART NUMBER 8001621

Pedestal Mounting Bracket for Model 93 Double Lamp

ADDITIONAL INFORMATION

Kit Includes:
(x1) 5/16 X 1 Carriage Bolt
(x1) 5/16 X 3 Carriage Bolt
(x1) Double Clamp for Model 93
(x1) Mounting Bracket
(x1) 5/16 Lock Nut With Nylon Insert
(x1) 5/16 Nut
(x1) Lock Washer

PRODUCT WARNINGS

For California residents:
⚠ **WARNING:** Cancer and reproductive harm - www.P65Warnings.ca.gov.
⚠ **AVERTISSEMENT:** Cancer et effet nocif sur la reproduction - www.P65Warnings.ca.gov.

SUITS THESE PRODUCTS



90mm Round LED Lights
90mm LED Headlight - Model 93

© 2026 J.W. Speaker Corporation • Germantown, WI U.S.A.
www.jwspeaker.com • speaker@jwspeaker.com • 262.251.6660

J.W. SPEAKER® Engineered. Lighting. Solutions.