PART NUMBER 8001471

90mm Light 3-Point Mount for 3mm Mounting Frame

PRODUCT INFORMATION

Description	90mm Light 3-Point Mount for 3mm Mounting Frame
Product Weight	0.26 lbs / 0.12 kgs
Shipping Weight	1.10 lbs / 0.5 kgs
Additional Information	Kit Includes: (x2) Model 93 Half Brackets (x3) Adjuster Rod, 7mm Ball (x3) 7mm Ball Socket (x2) Screw, #4-20



MODEL 93

PRODUCT DIMENSIONS

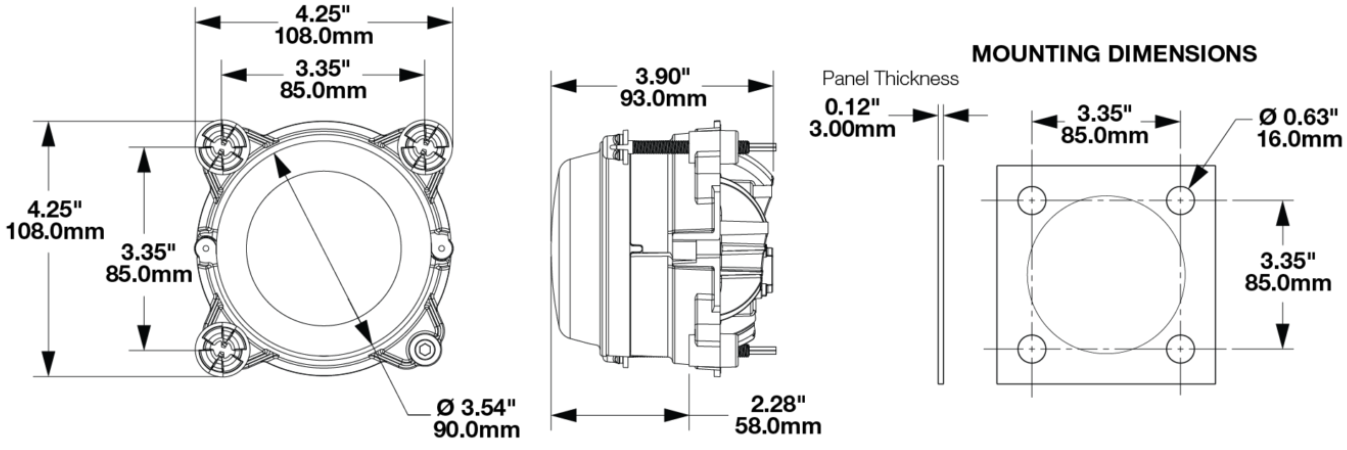

Print date: 2026-11-27
© 2026 J.W. Speaker Corporation • Germantown, WI U.S.A.
www.jwspeaker.com • speaker@jwspeaker.com • 262.251.6660

J.W. SPEAKER® Engineered. Lighting. Solutions.

PART NUMBER 8001471

90mm Light 3-Point Mount for 3mm Mounting Frame

REGULATORY STANDARDS COMPLIANCE



Buy America Standards Eco Friendly

APPLICATIONS



PRODUCT WARNINGS

For California residents:
⚠ **WARNING:** Cancer and reproductive harm - www.P65Warnings.ca.gov.
⚠ **AVERTISSEMENT:** Cancer et effet nocif sur la reproduction - www.P65Warnings.ca.gov.

SUITS THESE PRODUCTS



90mm Round LED Lights
90mm LED Headlight - Model 93

© 2026 J.W. Speaker Corporation • Germantown, WI U.S.A.
www.jwspeaker.com • speaker@jwspeaker.com • 262.251.6660

J.W. SPEAKER® Engineered. Lighting. Solutions.