PART NUMBER 0560892

90mm LED Headlight - Model 93

PRODUCT INFORMATION

Description	12-24V DOT/ECE RHT LED 5-in-1 Headlight with Mount - (Bulk Qty. x16 lights & mounts)
Height	90.00 mm / 3.54 in
Width	90.00 mm / 3.54 in
Depth	126.04 mm / 4.96 in
Shape	Round
Outer Lens Material	Polycarbonate
Outer Lens Color	Clear
Housing Material	Aluminum
Housing Color	Black
Minimum Operating Temperature	-40 °C / -40 °F
Maximum Operating Temperature	65 °C / 149 °F
Mating Connector	Deutsch DT06-6S
Product Weight	1.33 lbs / 0.6 kgs
Shipping Weight	22.77 lbs / 10.33 kgs



MODEL 93

Print date: 2026-11-27

© 2026 J.W. Speaker Corporation • Germantown, WI U.S.A.

www.jwspeaker.com • speaker@jwspeaker.com • 262.251.6660

J.W. SPEAKER® Engineered. Lighting. Solutions.

PART NUMBER 0560892

90mm LED Headlight - Model 93

PRODUCT DIMENSIONS

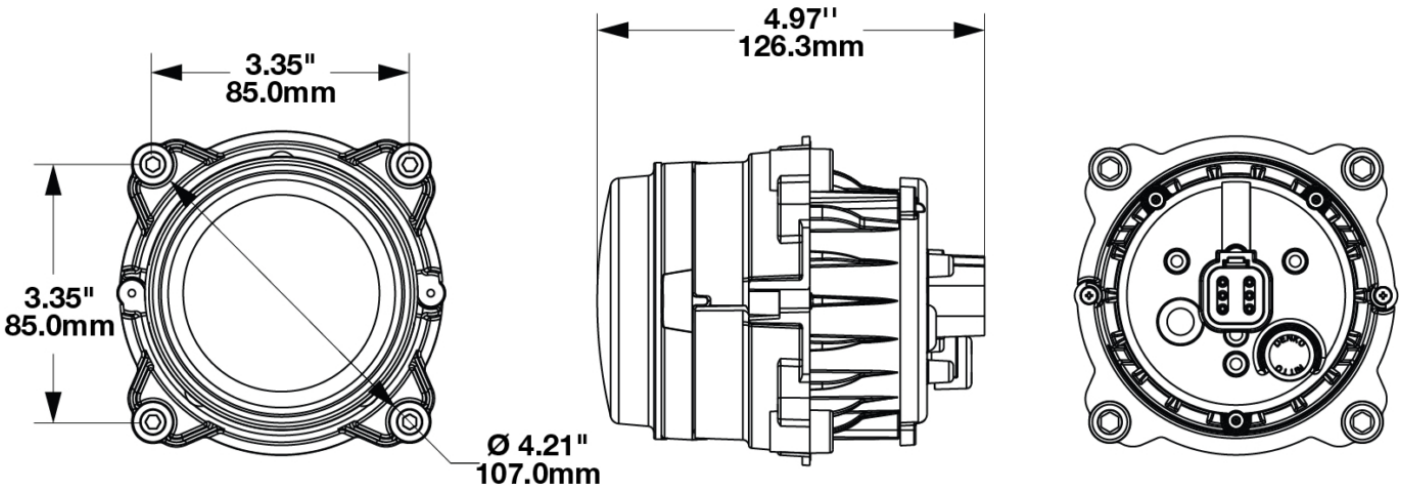

Pin Out Diagram & Wiring Information

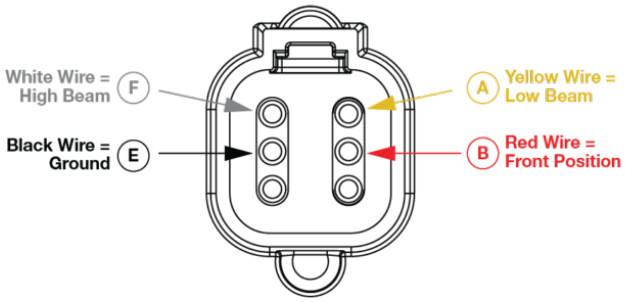

© 2026 J.W. Speaker Corporation • Germantown, WI U.S.A.
www.jwspeaker.com • speaker@jwspeaker.com • 262.251.6660

J.W. SPEAKER
Engineered. Lighting. Solutions.

PART NUMBER 0560892

90mm LED Headlight - Model 93

ELECTRICAL SPECIFICATIONS

Input Voltage	12-24V DC
Operating Voltage	9-30V DC
Transient Spike Protection	150V Peak @ 1 HZ-100 Pulses
Yellow Wire	Low Beam
Red Wire	Front Position
Orange Wire	DI
Blue Wire	DRL
Black Wire	Ground
White Wire	High Beam
Current Draw	1.35A @ 12V DC (Low Beam) 1.96A @ 12V DC (High Beam) 0.111A @ 12V DC (Front Position) 1.33A @ 12V DC (DRL) 1.11A @ 12V DC (DI) 0.701A @ 24V DC (Low Beam) 1.03A @ 24V DC (High Beam) 0.071A @ 24V DC (Front Position) 0.700A @ 24V DC (DRL) 0.591A @ 24V DC (DI)

REGULATORY STANDARDS COMPLIANCE

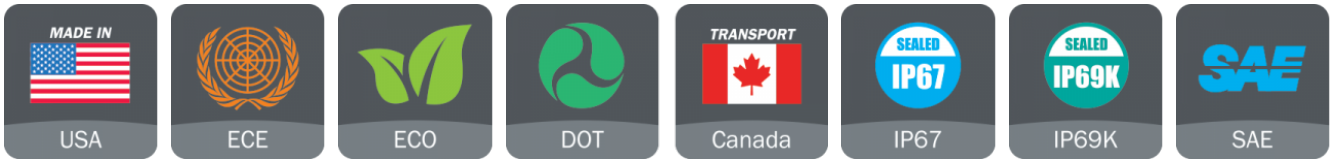

Buy America Standards	ECE Reg 10
ECE Reg 148 - 1b	ECE Reg 148 - A
ECE Reg 148 - RL	ECE Reg 149 - HC
ECE Reg 149 - R	Eco Friendly
FMVSS 108 s10.1 (Table XIX)	FMVSS 108 s10.1 (Table XVIII)
FMVSS 108 s7.1 (Table VI)	IEC IP67
IEC IP69K	SAE J2087
SAE J222	SAE J588

© 2026 J.W. Speaker Corporation • Germantown, WI U.S.A.
www.jwspeaker.com • speaker@jwspeaker.com • 262.251.6660

J.W. SPEAKER
Engineered. Lighting. Solutions.

PART NUMBER 0560892

90mm LED Headlight - Model 93

PHOTOMETRIC SPECIFICATIONS

Raw Lumen Output	1827(High Beam), 1325(Low Beam
Effective Lumen Output	683(High Beam), 495(Low Beam)
Candela Output	44,000(High Beam), 23,000(Low Beam)
Nominal LED Color Temperature	5665 K
Beam Pattern(s)	Forward Lighting - Daytime Running Light Forward Lighting - High Beam (DOT/ECE) Forward Lighting - Low Beam (DOT) Forward Lighting - Low Beam (ECE Right Hand) Signalization - Front Position Signalization - Turn (Front)

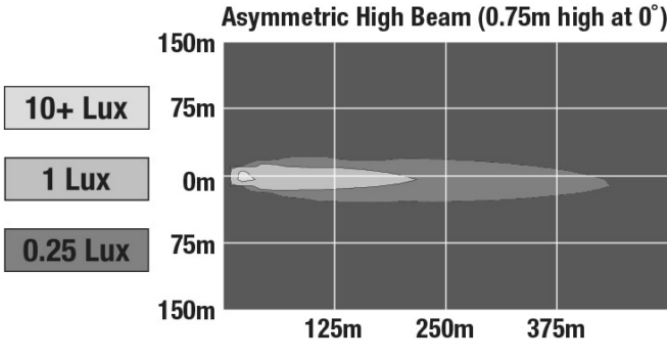

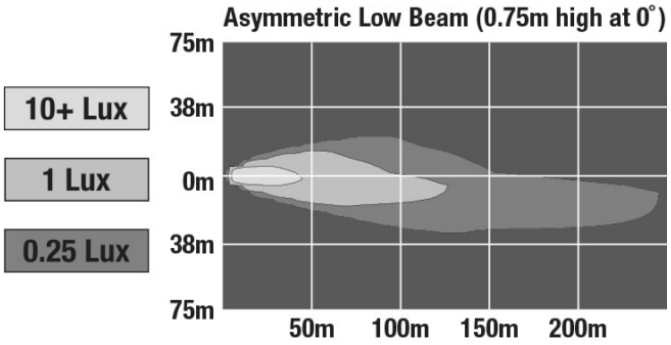

APPLICATIONS





© 2026 J.W. Speaker Corporation • Germantown, WI U.S.A.
www.jwspeaker.com • speaker@jwspeaker.com • 262.251.6660

J.W. SPEAKER® Engineered. Lighting. Solutions.

90mm LED Headlight - Model 93

ADDITIONAL INFORMATION

3-point Mount for 1.5mm Mounting Frame is applicable for
• PN 0554381
• PN 0553071
• PN 0553091
• PN 0553101
• PN 0553081
• PN 0556701
• PN 0347941
3-point Mount for 3mm Mounting Frame is applicable for
• All Model 93 Lighting Options

PRODUCT WARNINGS

For California residents:
⚠ **WARNING:** Cancer and reproductive harm - www.P65Warnings.ca.gov.
⚠ **AVERTISSEMENT:** Cancer et effet nocif sur la reproduction - www.P65Warnings.ca.gov.

© 2026 J.W. Speaker Corporation • Germantown, WI U.S.A.
www.jwspeaker.com • speaker@jwspeaker.com • 262.251.6660

90mm LED Headlight - Model 93

ACCESSORIES



Part Number 3271981
5 Function Wire Assembly for Model 93



Part Number 3272001
SAE/DOT Motorcycle Wire Assembly without DI/DRL for Model 93



Part Number 3272011
ECE Motorcycle Wire Assembly without DI for Model 93



Part Number 8001461
90mm Light 3-Point Mount for 1.5mm Mounting Frame



Part Number 8001471
90mm Light 3-Point Mount for 3mm Mounting Frame



Part Number 8001601
Pedestal Mounting Bracket for Model 93 Single Lamp



Part Number 8001621
Pedestal Mounting Bracket for Model 93 Double Lamp



Part Number 8201021
90mm 3-Point Lock Mount for 3mm Mounting Frame

© 2026 J.W. Speaker Corporation • Germantown, WI U.S.A.
www.jwspeaker.com • speaker@jwspeaker.com • 262.251.6660

J.W. SPEAKER® Engineered. Lighting. Solutions.

90mm LED Headlight - Model 93

RELATED PRODUCTS



Part Number 0347941
12-24V SAE/ECE LED Turn Signal with DRL Function



Part Number 0530091
12-24V DOT/ECE RHT LED High & Low Beam Headlight with Front Position



Part Number 0530101
12-24V ECE LHT LED High & Low Beam Headlight with Front Position



Part Number 0530321
12-24V SAE/ECE LED High & Low Beam with Front Position and DRL Function



Part Number 0553071
12-24V DOT/ECE LED High Beam Headlight



Part Number 0553081
12-24V DOT/ECE Symmetric LED Low Beam Headlight



Part Number 0553091
12-24V ECE LHT LED Low Beam Headlight



Part Number 0553101
12-24V DOT/ECE RHT LED Low Beam Headlight

© 2026 J.W. Speaker Corporation • Germantown, WI U.S.A.
www.jwspeaker.com • speaker@jwspeaker.com • 262.251.6660

J.W. SPEAKER® Engineered. Lighting. Solutions.