PART NUMBER 0554381

90mm LED Headlight - Model 93

PRODUCT INFORMATION

Description	12-24V DOT/ECE LED High Beam Headlight with Front Position
Height	90.00 mm / 3.54 in
Width	90.00 mm / 3.54 in
Depth	95.00 mm / 3.74 in
Shape	Round
Outer Lens Material	Polycarbonate
Outer Lens Color	Clear
Housing Material	Die-Cast Aluminum
Housing Color	Black
Bezel Color	Black
Minimum Operating Temperature	-40 °C / -40 °F
Maximum Operating Temperature	65 °C / 149 °F
Connector or Wiring	Deutsch DT04-3P
Mating Connector	Deutsch DT06-3S
Product Weight	1.22 lbs / 0.55 kgs
Shipping Weight	1.44 lbs / 0.65 kgs





PRODUCT DIMENSIONS

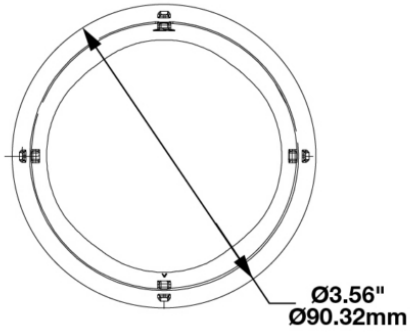

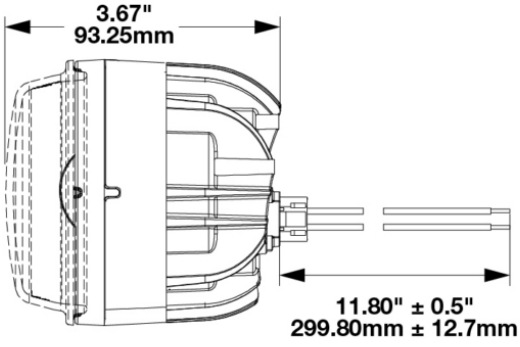

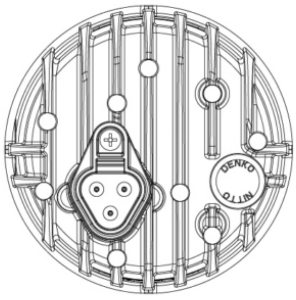

Print date: 2026-11-27

© 2026 J.W. Speaker Corporation • Germantown, WI U.S.A.

www.jwspeaker.com • speaker@jwspeaker.com • 262.251.6660

J.W. SPEAKER
Engineered. Lighting. Solutions.

PART NUMBER 0554381

90mm LED Headlight - Model 93

ELECTRICAL SPECIFICATIONS

Input Voltage	12-24V DC
Operating Voltage	10-31V DC
Black Wire	Ground
White Wire	High Beam
Yellow Wire	Front Position
Current Draw	0.80A @ 12V DC (High Beam) 0.40A @ 24V DC (High Beam) 0.40A @ 12V DC (Front Position) 0.20A @ 24V DC (Front Position)

REGULATORY STANDARDS COMPLIANCE



Buy America Standards
ECE Reg 10
ECE Reg 112
ECE Reg 7
Eco Friendly
FMVSS 108 s10.1 (Table XVIII)
IEC IP69K

PHOTOMETRIC SPECIFICATIONS

Raw Lumen Output	630
Effective Lumen Output	230
Candela Output	45,000
Nominal LED Color Temperature	5000 K
Beam Pattern(s)	Forward Lighting - High Beam (DOT/ECE) Signalization - Front Position

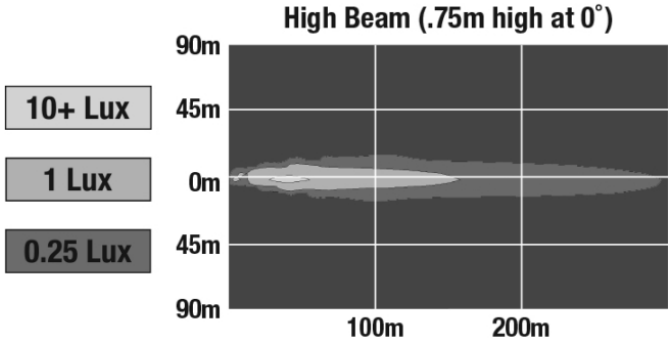

© 2026 J.W. Speaker Corporation • Germantown, WI U.S.A.
www.jwspeaker.com • speaker@jwspeaker.com • 262.251.6660

J.W. SPEAKER® Engineered. Lighting. Solutions.

PART NUMBER 0554381

90mm LED Headlight - Model 93

APPLICATIONS



ADDITIONAL INFORMATION

This is a single light, including (1) lamp and mounting hardware.

Headlight must be securely mounted and properly aimed such that the beam pattern cut off line complies with all applicable regulations. If you are not familiar with the legal requirements for aiming your headlights, please see a professional service provider. We recommend that headlights are aimed with a headlight aiming system for proper alignment.

This is an FMVSS UB6 high beam. It requires that the low beam is powered at the same time as the high beam to be compliant for use on the road.

3-point Mount for 1.5mm Mounting Frame is applicable for
- PN 0554381
- PN 0553071
- PN 0553091
- PN 0553101
- PN 0553081
- PN 0556701
- PN 0347941

3-point Mount for 3mm Mounting Frame is applicable for
- All Model 93 Lighting Options

PRODUCT WARNINGS

For California residents:
⚠ **WARNING:** Cancer and reproductive harm - www.P65Warnings.ca.gov.
⚠ **AVERTISSEMENT:** Cancer et effet nocif sur la reproduction - www.P65Warnings.ca.gov.

© 2026 J.W. Speaker Corporation • Germantown, WI U.S.A.
www.jwspeaker.com • speaker@jwspeaker.com • 262.251.6660

J.W. SPEAKER® Engineered. Lighting. Solutions.

90mm LED Headlight - Model 93

ACCESSORIES



Part Number 3271981
5 Function Wire Assembly for Model 93



Part Number 3272001
SAE/DOT Motorcycle Wire Assembly without DI/DRL for Model 93



Part Number 3272011
ECE Motorcycle Wire Assembly without DI for Model 93



Part Number 8001461
90mm Light 3-Point Mount for 1.5mm Mounting Frame



Part Number 8001471
90mm Light 3-Point Mount for 3mm Mounting Frame



Part Number 8001601
Pedestal Mounting Bracket for Model 93 Single Lamp



Part Number 8001621
Pedestal Mounting Bracket for Model 93 Double Lamp



Part Number 8201021
90mm 3-Point Lock Mount for 3mm Mounting Frame

© 2026 J.W. Speaker Corporation • Germantown, WI U.S.A.
www.jwspeaker.com • speaker@jwspeaker.com • 262.251.6660

J.W. SPEAKER® Engineered. Lighting. Solutions.

90mm LED Headlight - Model 93

RELATED PRODUCTS



Part Number 0347941
12-24V SAE/ECE LED Turn Signal with DRL Function



Part Number 0530091
12-24V DOT/ECE RHT LED High & Low Beam Headlight with Front Position



Part Number 0530101
12-24V ECE LHT LED High & Low Beam Headlight with Front Position



Part Number 0530321
12-24V SAE/ECE LED High & Low Beam with Front Position and DRL Function



Part Number 0553071
12-24V DOT/ECE LED High Beam Headlight



Part Number 0553081
12-24V DOT/ECE Symmetric LED Low Beam Headlight



Part Number 0553091
12-24V ECE LHT LED Low Beam Headlight



Part Number 0553101
12-24V DOT/ECE RHT LED Low Beam Headlight

© 2026 J.W. Speaker Corporation • Germantown, WI U.S.A.
www.jwspeaker.com • speaker@jwspeaker.com • 262.251.6660

J.W. SPEAKER® Engineered. Lighting. Solutions.