PART NUMBER 0530091

90mm LED Headlight - Model 93

PRODUCT INFORMATION

Description	12-24V DOT/ECE RHT LED High & Low Beam Headlight with Front Position
Height	90.00 mm / 3.54 in
Width	90.00 mm / 3.54 in
Depth	126.00 mm / 4.96 in
Shape	Round
Outer Lens Material	Polycarbonate
Outer Lens Color	Clear
Housing Color	Black
Minimum Operating Temperature	-40 °C / -40 °F
Maximum Operating Temperature	65 °C / 149 °F
Mating Connector	DEUTSCH DT06-6S
Product Weight	1.18 lbs / 0.54 kgs
Shipping Weight	1.33 lbs / 0.6 kgs
Additional Information	3-point Mount for 1.5mm Mounting Frame and 3-point Mount for 3mm Mounting Frame is applicable for • All Model 93 Lighting Options LAMP IS NOT SUPPLIED WITH A HARNES



MODEL 93

Print date: 2026-11-27

© 2026 J.W. Speaker Corporation • Germantown, WI U.S.A.

www.jwspeaker.com • speaker@jwspeaker.com • 262.251.6660

J.W. SPEAKER® Engineered. Lighting. Solutions.

PART NUMBER 0530091

90mm LED Headlight - Model 93

PRODUCT DIMENSIONS

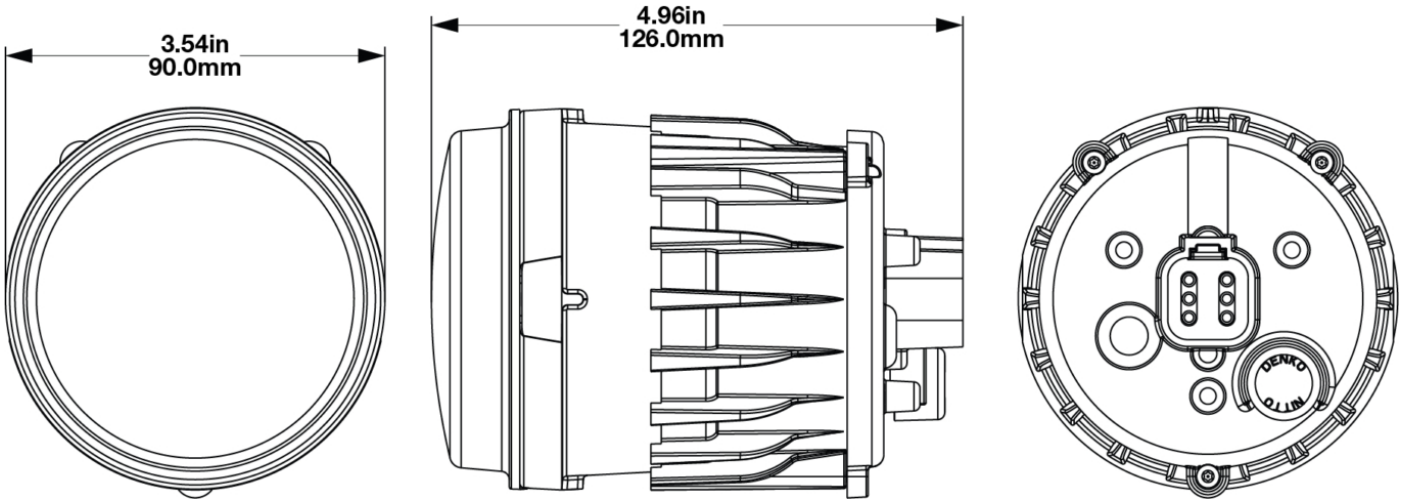

Pin Out Diagram & Wiring Information

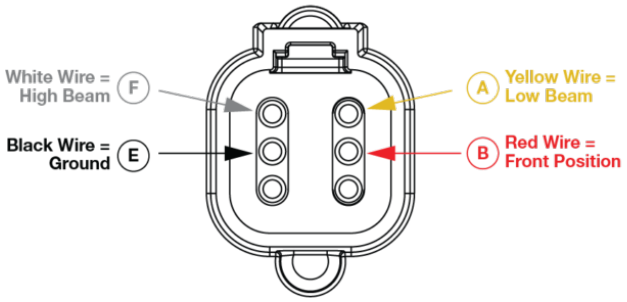

© 2026 J.W. Speaker Corporation • Germantown, WI U.S.A.
www.jwspeaker.com • speaker@jwspeaker.com • 262.251.6660

J.W. SPEAKER
Engineered. Lighting. Solutions.

PART NUMBER 0530091

90mm LED Headlight - Model 93

ELECTRICAL SPECIFICATIONS

Input Voltage	12-24V DC
Operating Voltage	9-30V DC
Pin 1 Wire	Low Beam
Pin 2 Wire	Front Position
Pin 3 Wire	N/A
Pin 4 Wire	N/A
Pin 5 Wire	Ground
Pin 6 Wire	High Beam
Current Draw	1.13A @ 12V DC (Low Beam) 1.45A @ 12V DC (High Beam) 0.111A @ 12V DC (Front Position) 0.701A @ 24V DC (Low Beam) 1.03A @ 24V DC (High Beam) 0.071A @ 24V DC (Front Position)

REGULATORY STANDARDS COMPLIANCE



ECE Reg 10
ECE Reg 148 - A
ECE Reg 149 - HC
ECE Reg 149 - HR
FMVSS 108 s10.1 (Table XIX)
FMVSS 108 s10.1 (Table XVIII)

© 2026 J.W. Speaker Corporation • Germantown, WI U.S.A.
www.jwspeaker.com • speaker@jwspeaker.com • 262.251.6660

J.W. SPEAKER® Engineered. Lighting. Solutions.

PART NUMBER 0530091

90mm LED Headlight - Model 93

PHOTOMETRIC SPECIFICATIONS

Raw Lumen Output	2650(High Beam), 1750(Low Beam)
Effective Lumen Output	790(High Beam), 650(Low Beam)
Candela Output	44,000(High Beam), 23,000(Low Beam)
Nominal LED Color Temperature	5665 K
Beam Pattern(s)	Forward Lighting - Driving Forward Lighting - High Beam (DOT/ECE) Forward Lighting - Low Beam (ECE Right Hand) Forward Lighting - Low Beam (DOT/ECE) Signalization - Front Position

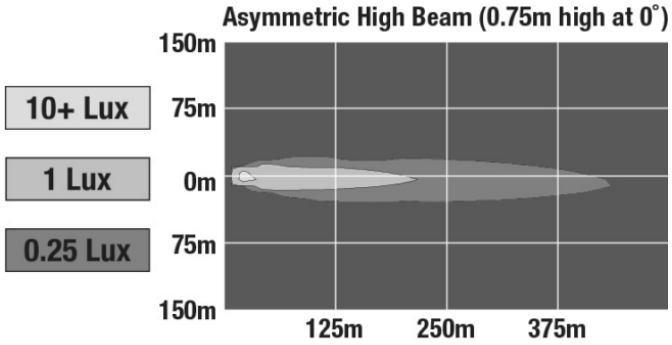

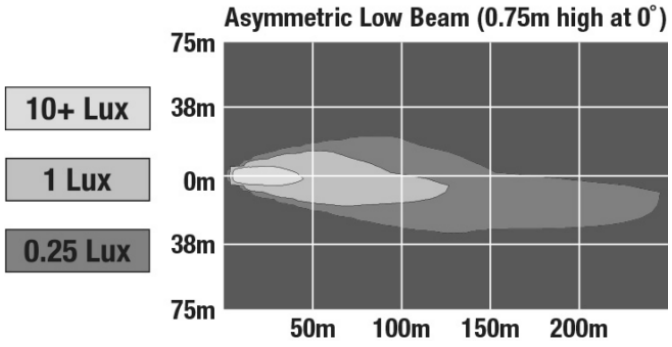

APPLICATIONS



PRODUCT WARNINGS

For California residents:
⚠ **WARNING:** Cancer and reproductive harm - www.P65Warnings.ca.gov.
⚠ **AVERTISSEMENT:** Cancer et effet nocif sur la reproduction - www.P65Warnings.ca.gov.

Print date: 2026-11-27
© 2026 J.W. Speaker Corporation • Germantown, WI U.S.A.
www.jwspeaker.com • speaker@jwspeaker.com • 262.251.6660

J.W. SPEAKER® Engineered. Lighting. Solutions.

90mm LED Headlight - Model 93

ACCESSORIES



Part Number 3271981
5 Function Wire Assembly for Model 93



Part Number 3272001
SAE/DOT Motorcycle Wire Assembly without DI/DRL for Model 93



Part Number 3272011
ECE Motorcycle Wire Assembly without DI for Model 93



Part Number 8001461
90mm Light 3-Point Mount for 1.5mm Mounting Frame



Part Number 8001471
90mm Light 3-Point Mount for 3mm Mounting Frame



Part Number 8001601
Pedestal Mounting Bracket for Model 93 Single Lamp



Part Number 8001621
Pedestal Mounting Bracket for Model 93 Double Lamp



Part Number 8201021
90mm 3-Point Lock Mount for 3mm Mounting Frame

© 2026 J.W. Speaker Corporation • Germantown, WI U.S.A.
www.jwspeaker.com • speaker@jwspeaker.com • 262.251.6660

J.W. SPEAKER® Engineered. Lighting. Solutions.

90mm LED Headlight - Model 93

RELATED PRODUCTS



Part Number 0347941
12-24V SAE/ECE LED Turn Signal with DRL Function



Part Number 0530101
12-24V ECE LHT LED High & Low Beam Headlight with Front Position



Part Number 0530321
12-24V SAE/ECE LED High & Low Beam with Front Position and DRL Function



Part Number 0553071
12-24V DOT/ECE LED High Beam Headlight



Part Number 0553081
12-24V DOT/ECE Symmetric LED Low Beam Headlight



Part Number 0553091
12-24V ECE LHT LED Low Beam Headlight



Part Number 0553101
12-24V DOT/ECE RHT LED Low Beam Headlight



Part Number 0554381
12-24V DOT/ECE LED High Beam Headlight with Front Position

© 2026 J.W. Speaker Corporation • Germantown, WI U.S.A.
www.jwspeaker.com • speaker@jwspeaker.com • 262.251.6660

J.W. SPEAKER® Engineered. Lighting. Solutions.