**PART NUMBER 0347941**

# 90mm LED Headlight - Model 93

## PRODUCT INFORMATION

| | |
|---|---|
| **Description** | 12-24V SAE/ECE LED Turn Signal with DRL Function |
| **Height** | 125.00 mm / 4.92 in |
| **Width** | 90.00 mm / 3.54 in |
| **Depth** | 95.00 mm / 3.74 in |
| **Shape** | Round |
| **Outer Lens Material** | Polycarbonate |
| **Outer Lens Color** | Clear |
| **Housing Material** | Die-Cast Aluminum |
| **Housing Color** | Black |
| **Bezel Color** | Clear |
| **Mounting Type** | Pedestal |
| **Minimum Operating Temperature** | -40 °C / -40 °F |
| **Maximum Operating Temperature** | 65 °C / 149 °F |
| **Connector or Wiring** | Deutsch DT04-4P |
| **Mating Connector** | Deutsch DT06-4S |
| **Product Weight** | 1.00 lbs / 0.45 kgs |
| **Shipping Weight** | 1.20 lbs / 0.54 kgs |






## PRODUCT DIMENSIONS

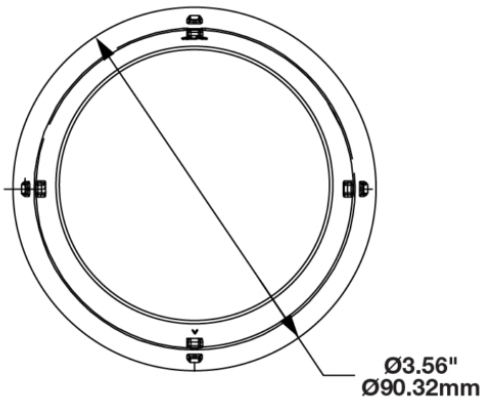


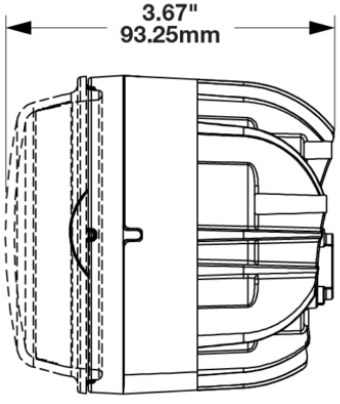


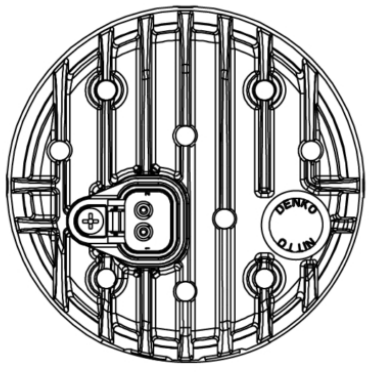

**Print date: 2026-11-27**

© 2026 J.W. Speaker Corporation • Germantown, WI U.S.A.

www.jwspeaker.com • speaker@jwspeaker.com • 262.251.6660

J.W. SPEAKER
Engineered. Lighting. Solutions.

PART NUMBER 0347941

# 90mm LED Headlight - Model 93

## ELECTRICAL SPECIFICATIONS

| | |
|---|---|
| **Input Voltage** | 12-24V DC |
| **Operating Voltage** | 10-30V DC |
| **Transient Spike Protection** | 150V Peak @ 1 HZ-100 Pul |
| **Black Wire** | Ground |
| **Yellow Wire** | Front Turn |
| **Red Wire** | DRL |
| **White Wire** | Front Position |
| **Current Draw** | 1.18A @ 12V DC (Front Turn)<br>0.45A @ 24V DC (Front Turn)<br>0.60A @ 12V DC (DRL)<br>0.35A @ 24V DC (DRL)<br>0.06A @ 12V DC (Front Position)<br>0.04A @ 24V DC (Front Position) |

## REGULATORY STANDARDS COMPLIANCE




Buy America Standards
ECE Reg 6
ECE Reg 7
ECE Reg 87
Eco Friendly
FMVSS 108 s7.1 (Table VI)
IEC IP69K
SAE J2087
SAE J588

## PHOTOMETRIC SPECIFICATIONS

| | |
|---|---|
| **Nominal LED Color Temperature** | 5000 K |
| **Beam Pattern(s)** | Forward Lighting - Daytime Running Light<br>Signalization - Front Position<br>Signalization - Turn (Front) |

**Print date: 2026-11-27**

© 2026 J.W. Speaker Corporation • Germantown, WI U.S.A.

www.jwspeaker.com • speaker@jwspeaker.com • 262.251.6660

J.W. SPEAKER® Engineered. Lighting. Solutions.

PART NUMBER 0347941

# 90mm LED Headlight - Model 93

## APPLICATIONS




## ADDITIONAL INFORMATION

3-point Mount for 1.5mm Mounting Frame is applicable for
- PN 0554381
- PN 0553071
- PN 0553091
- PN 0553101
- PN 0553081
- PN 0556701
- PN 0347941

3-point Mount for 3mm Mounting Frame is applicable for
- All Model 93 Lighting Options

## PRODUCT WARNINGS

For California residents:
⚠ **WARNING:** Cancer and reproductive harm - www.P65Warnings.ca.gov.
⚠ **AVERTISSEMENT:** Cancer et effet nocif sur la reproduction - www.P65Warnings.ca.gov.


© 2026 J.W. Speaker Corporation • Germantown, WI U.S.A.
www.jwspeaker.com • speaker@jwspeaker.com • 262.251.6660

J.W. SPEAKER® Engineered. Lighting. Solutions.

# 90mm LED Headlight - Model 93

## ACCESSORIES



**Part Number 3271981**
5 Function Wire Assembly for Model 93



**Part Number 3272001**
SAE/DOT Motorcycle Wire Assembly without DI/DRL for Model 93



**Part Number 3272011**
ECE Motorcycle Wire Assembly without DI for Model 93



**Part Number 8001461**
90mm Light 3-Point Mount for 1.5mm Mounting Frame



**Part Number 8001471**
90mm Light 3-Point Mount for 3mm Mounting Frame



**Part Number 8001601**
Pedestal Mounting Bracket for Model 93 Single Lamp



**Part Number 8001621**
Pedestal Mounting Bracket for Model 93 Double Lamp



**Part Number 8201021**
90mm 3-Point Lock Mount for 3mm Mounting Frame


© 2026 J.W. Speaker Corporation • Germantown, WI U.S.A.
www.jwspeaker.com • speaker@jwspeaker.com • 262.251.6660

J.W. SPEAKER® Engineered. Lighting. Solutions.

# 90mm LED Headlight - Model 93

## RELATED PRODUCTS



**Part Number 0530091**
12-24V DOT/ECE RHT LED High & Low Beam Headlight with Front Position



**Part Number 0530101**
12-24V ECE LHT LED High & Low Beam Headlight with Front Position



**Part Number 0530321**
12-24V SAE/ECE LED High & Low Beam with Front Position and DRL Function



**Part Number 0553071**
12-24V DOT/ECE LED High Beam Headlight



**Part Number 0553081**
12-24V DOT/ECE Symmetric LED Low Beam Headlight



**Part Number 0553091**
12-24V ECE LHT LED Low Beam Headlight



**Part Number 0553101**
12-24V DOT/ECE RHT LED Low Beam Headlight



**Part Number 0554381**
12-24V DOT/ECE LED High Beam Headlight with Front Position


© 2026 J.W. Speaker Corporation • Germantown, WI U.S.A.
www.jwspeaker.com • speaker@jwspeaker.com • 262.251.6660

J.W. SPEAKER® Engineered. Lighting. Solutions.