PART NUMBER 1403621

Model 777 GEN 2 - LED Forklift Warning Light and ARC Safety Light

PRODUCT INFORMATION

Description	12-72V DC Green ARC Warning Light
Height	127.10 mm / 5 in
Width	110.30 mm / 4.34 in
Depth	76.60 mm / 3.02 in
Outer Lens Material	Polycarbonate
Outer Lens Color	Clear
Housing Material	Die-Cast Aluminum
Housing Color	Black
Bezel Color	Black
Mounting Hardware Description	(x1) M10-30
Mounting Type	Pedestal
Minimum Operating Temperature	-40 °C / -40 °F
Maximum Operating Temperature	65 °C / 149 °F
Connector or Wiring	19.5" Bare Leads (tinned)
Product Weight	1.50 lbs / 0.68 kgs
Shipping Weight	1.50 lbs / 0.68 kgs



MODEL 777

Print date: 2026-11-24

© 2026 J.W. Speaker Corporation • Germantown, WI U.S.A.

www.jwspeaker.com • speaker@jwspeaker.com • 262.251.6660

J.W. SPEAKER® Engineered. Lighting. Solutions.

PART NUMBER 1403621

Model 777 GEN 2 - LED Forklift Warning Light and ARC Safety Light

PRODUCT DIMENSIONS

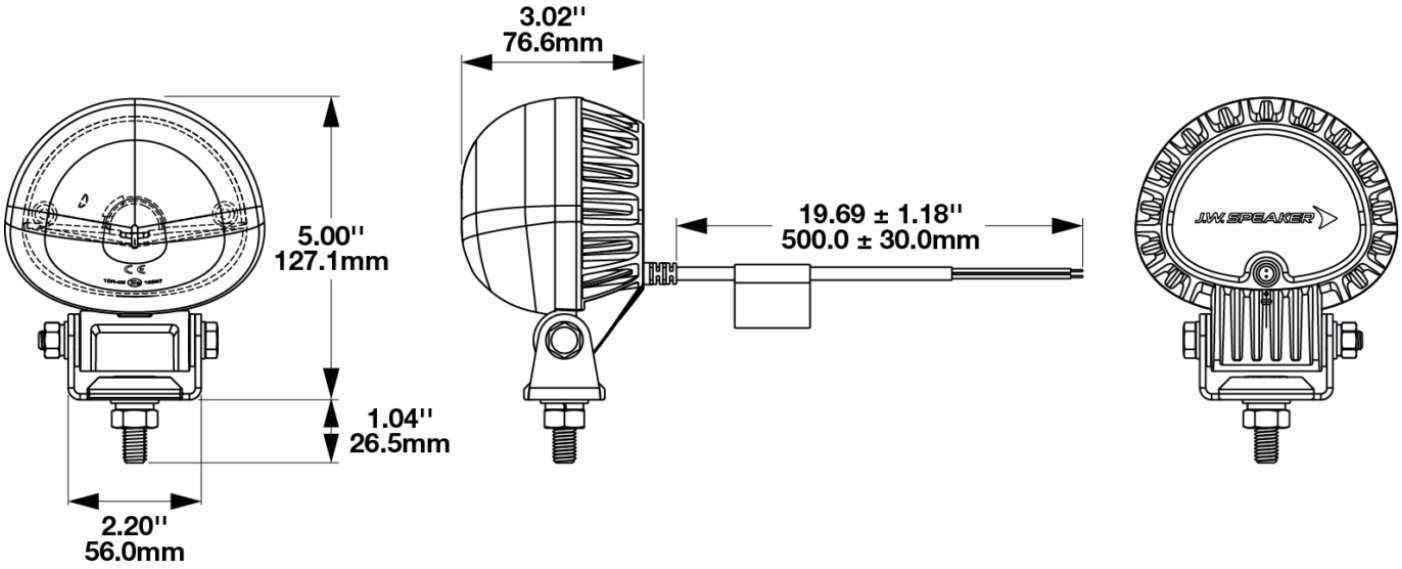

ELECTRICAL SPECIFICATIONS

Input Voltage	12-72V DC
Operating Voltage	10-80V DC
Transient Spike Protection	330V Peak @ 1 HZ-100 Pulses
Black Wire	Negative
Red Wire	Positive
Current Draw	1.06A @ 12V DC 0.51A @ 24V DC 0.34A @ 36V DC 0.26A @ 48V DC 0.21A @ 60V DC 0.18A @ 72V DC

© 2026 J.W. Speaker Corporation • Germantown, WI U.S.A.
www.jwspeaker.com • speaker@jwspeaker.com • 262.251.6660

J.W. SPEAKER® Engineered. Lighting. Solutions.

PART NUMBER 1403621

Model 777 GEN 2 - LED Forklift Warning Light and ARC Safety Light

REGULATORY STANDARDS COMPLIANCE

ECE Reg 10
IEC IP69K
SAE J1455
IEC IP67
SAE J1113-13

PHOTOMETRIC SPECIFICATIONS

Effective Lumen Output	100
Candela Output	3200
Beam Pattern(s)	Warning - Keep Out Zone

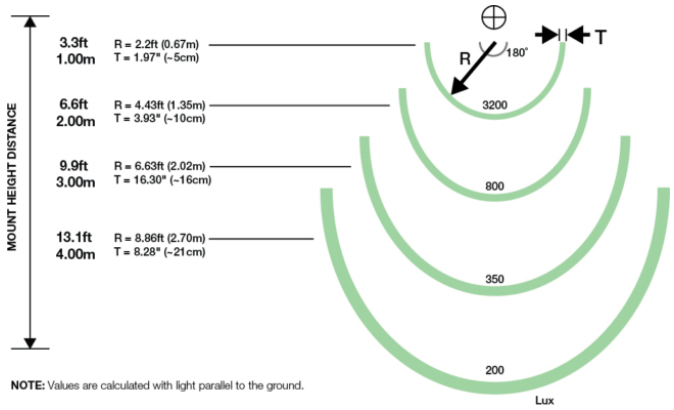

APPLICATIONS

Construction
Industrial
Material

PRODUCT WARNINGS

For California residents:
⚠ **WARNING:** Cancer and reproductive harm - www.P65Warnings.ca.gov.
⚠ **AVERTISSEMENT:** Cancer et effet nocif sur la reproduction - www.P65Warnings.ca.gov.

Print date: 2026-11-24
© 2026 J.W. Speaker Corporation • Germantown, WI U.S.A.
www.jwspeaker.com • speaker@jwspeaker.com • 262.251.6660

J.W. SPEAKER® Engineered. Lighting. Solutions.

Model 777 GEN 2 - LED Forklift Warning Light and ARC Safety Light

RELATED PRODUCTS



Part Number 1403601
12-72V DC Red ARC Warning Light



Part Number 1403611
12-72V DC Blue ARC Warning Light

© 2026 J.W. Speaker Corporation • Germantown, WI U.S.A.
www.jwspeaker.com • speaker@jwspeaker.com • 262.251.6660

J.W. SPEAKER® Engineered. Lighting. Solutions.