PART NUMBER 8200001

Single Ring Kit Mounting Assembly for LED Headlight Model 8630

PRODUCT INFORMATION

Description	Single Ring Kit Mounting Assembly for LED Headlight Model 8630
Height	191.01 mm / 7.52 in
Width	191.01 mm / 7.52 in
Depth	57.91 mm / 2.28 in
Product Weight	1.24 lbs / 0.56 kgs
Shipping Weight	3.50 lbs / 1.59 kgs



PRODUCT DIMENSIONS

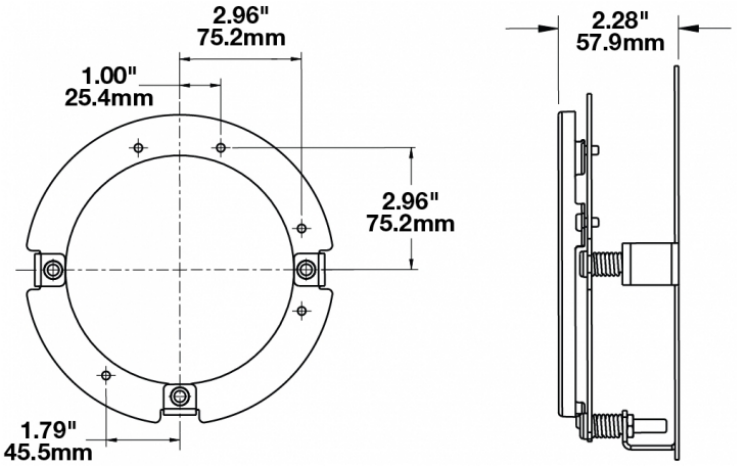

Print date: 2026-11-24
© 2026 J.W. Speaker Corporation • Germantown, WI U.S.A.
www.jwspeaker.com • speaker@jwspeaker.com • 262.251.6660

J.W. SPEAKER® Engineered. Lighting. Solutions.

PART NUMBER 8200001

Single Ring Kit Mounting Assembly for LED Headlight Model 8630

REGULATORY STANDARDS COMPLIANCE

Buy America Standards

APPLICATIONS

Construction | Mining | Off-Road 4x4 | Power Sports | Railroad | Specialty | Truck & Bus

PRODUCT WARNINGS

For California residents:
⚠ **WARNING:** Cancer and reproductive harm - www.P65Warnings.ca.gov.
⚠ **AVERTISSEMENT:** Cancer et effet nocif sur la reproduction - www.P65Warnings.ca.gov.

SUITS THESE PRODUCTS



5.75" Round Headlights
LED Headlights –
Model 8630 Evolution

Print date: 2026-11-24
© 2026 J.W. Speaker Corporation • Germantown, WI U.S.A.
www.jwspeaker.com • speaker@jwspeaker.com • 262.251.6660

J.W. SPEAKER® Engineered. Lighting. Solutions.