LED Stop, Tail, Turn & Backup Lights - Model 280

PRODUCT INFORMATION

Description	12V LED Stop, Tail, Turn Signal & Backup Light
Height	189.23 mm / 7.45 in
Width	49.02 mm / 1.93 in
Depth	22.10 mm / 0.87 in
Shape	Rectangular
Outer Lens Material	Acrylic
Outer Lens Color	Clear
Housing Material	ABS
Housing Color	Black
Mounting Type	Low Profile Mount
Minimum Operating Temperature	-40 °C / -40 °F
Maximum Operating Temperature	65 °C / 149 °F
Connector or Wiring	Integrated Packard Socket
Mating Connector	Packard (#12052848)
Product Weight	0.28 lbs / 0.13 kgs

PRODUCT DIMENSIONS

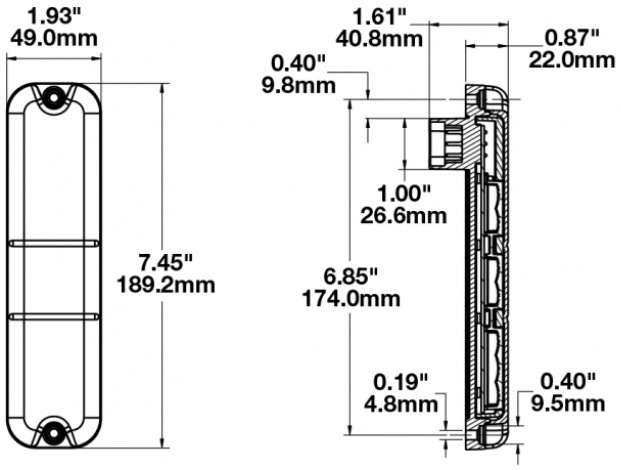

Print date: 2016-12-09

© 2016 J.W. Speaker Corporation • Germantown, WI U.S.A.

www.jwspeaker.com • speaker@jwspeaker.com • 262.251.6660

J.W. SPEAKER®
Engineered. Lighting. Solutions.

LED Stop, Tail, Turn & Backup Lights - Model 280

ELECTRICAL SPECIFICATIONS

Input Voltage	12V DC
Operating Voltage	9-16V DC
Current Draw	0.105 A @ 12V DC (Stop) 0.020A @ 12V DC (Tail) 0.105A @ 12V DC (Turn) 0.090A @ 12V DC (Backup)

REGULATORY STANDARDS COMPLIANCE

Buy America Standards
IEC IP66
SAE J1889
UL Recognized

Eco Friendly
SAE J1455
SAE J575

PHOTOMETRIC SPECIFICATIONS

Beam Pattern(s)	Signalization - Stop Signalization - Tail Signalization - Turn (Front) Signalization - Turn (Rear)

APPLICATIONS

Print date: 2016-12-09

© 2016 J.W. Speaker Corporation • Germantown, WI U.S.A.

www.jwspeaker.com • speaker@jwspeaker.com • 262.251.6660

J.W. SPEAKER®
Engineered. Lighting. Solutions.