PART NUMBER 0550713

LED Off road Light - Model TS3001V

PRODUCT INFORMATION

Description	12-24V LED Auxiliary Light with Pencil Beam - 2 Light Kit
Height	150.00 mm / 5.91 in
Width	184.00 mm / 7.24 in
Depth	104.00 mm / 4.09 in
Shape	Oval
Outer Lens Material	Polycarbonate
Outer Lens Color	Clear
Housing Material	Xenoy
Housing Color	Black
Mounting Hardware Description	(x1) 3/8-16 x 1.5" Stainless Steel Screws
Mounting Type	Bracket
Connector or Wiring	Integral Deutsch DT04-2P
Mating Connector	DT06-2S
Product Weight	2.01 lbs / 0.91 kgs
Shipping Weight	4.02 lbs / 1.82 kgs

PRODUCT DIMENSIONS

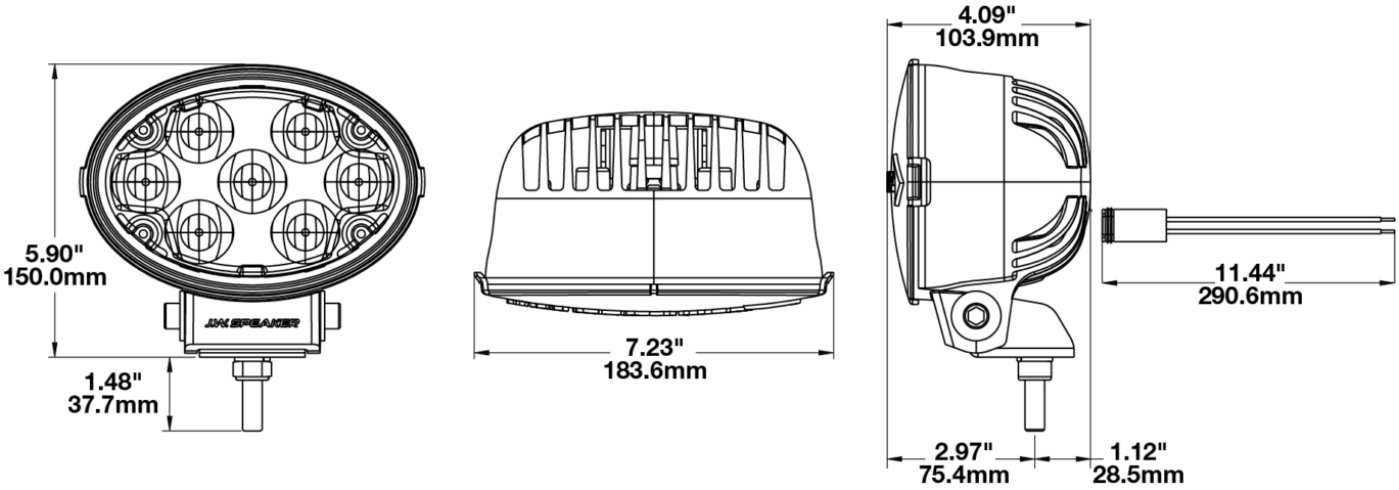

Print date: 2024-04-20

© 2024 J.W. Speaker Corporation • Germantown, WI U.S.A.

www.jwspeaker.com • speaker@jwspeaker.com • 262.251.6660

J.W. SPEAKER® Engineered. Lighting. Solutions.

PART NUMBER 0550713

LED Off road Light - Model TS3001V

ELECTRICAL SPECIFICATIONS

Input Voltage	12-24V DC
Operating Voltage	9-32V DC
Red Wire	Power
Black Wire	Ground
Current Draw	1.40A @ 9V DC 0.90A @ 16V DC (DC On) 2.70A @ 9V DC (Jeep On) 1.60A @ 16V DC (Jeep On)

REGULATORY STANDARDS COMPLIANCE

Buy America Standards

Eco Friendly

PHOTOMETRIC SPECIFICATIONS

Raw Lumen Output	1,960
Effective Lumen Output	1,080
Candela Output	96.000
Beam Pattern(s)	Forward Lighting - Pencil

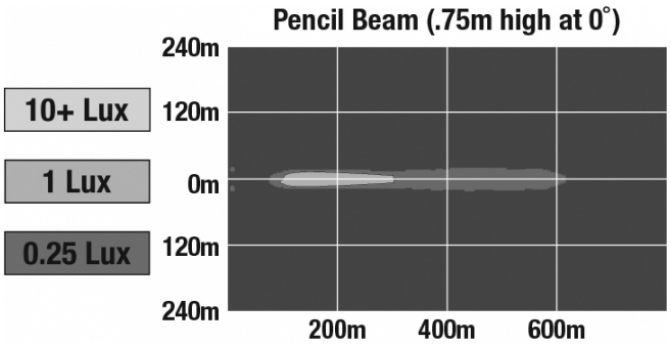

© 2024 J.W. Speaker Corporation • Germantown, WI U.S.A.
www.jwspeaker.com • speaker@jwspeaker.com • 262.251.6660

J.W. SPEAKER® Engineered. Lighting. Solutions.

LED Off road Light - Model TS3001V

APPLICATIONS

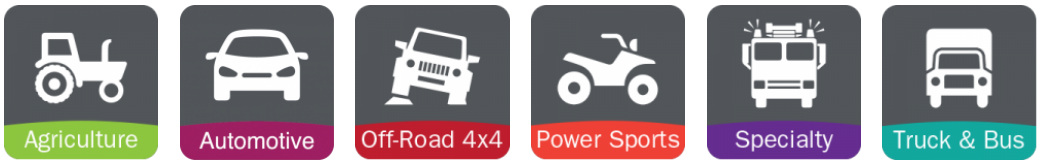

PRODUCT WARNINGS

For California residents:
⚠ **WARNING:** Cancer and reproductive harm - www.P65Warnings.ca.gov.
⚠ **AVERTISSEMENT:** Cancer et effet nocif sur la reproduction - www.P65Warnings.ca.gov.

ACCESSORIES

Part Number 5865951
Black Replacement Lens Cover for Model TS3001V

Part Number 5874231
Clear Replacement Lens Cover for Model TS3001V

Part Number 5874241
Red Replacement Lens Cover for Model TS3001V

Part Number 5874251
Amber Replacement Lens Cover for Model TS3001V

Part Number 5874261
Blue Replacement Lens Cover for Model TS3001V

Part Number 6149203
A-Pillar Mounting Kit for Jeep JK

Part Number 6149233
A-Pillar Mounting Kit for Jeep TJ

Print date: 2024-04-20
© 2024 J.W. Speaker Corporation • Germantown, WI U.S.A.
www.jwspeaker.com • speaker@jwspeaker.com • 262.251.6660

J.W. SPEAKER® Engineered. Lighting. Solutions.

LED Off road Light - Model TS3001V

RELATED PRODUCTS

Part Number 0550671
12-24V DOT LED Auxiliary Light with Driving Beam - 1 Light

Part Number 0550673
12-24V DOT LED Auxiliary Light with Driving Beam - 2 Light Kit

Part Number 0550691
12-24V ECE LED Auxiliary Light with Driving Beam - 1 Light

Part Number 0550693
12-24V ECE LED Auxiliary Light with Driving Beam - 2 Light Kit

Part Number 0550711
12-24V LED Auxiliary Light with Pencil Beam - 1 Light

© 2024 J.W. Speaker Corporation • Germantown, WI U.S.A.
www.jwspeaker.com • speaker@jwspeaker.com • 262.251.6660

J.W. SPEAKER® Engineered. Lighting. Solutions.