Adaptive LED Headlights - Model 8690 Adaptive

PRODUCT INFORMATION

Description	12V DOT/ECE LED High & Low Beam Adaptive Headlight with Black Inner Bezel
Height	143.00 mm / 5.63 in
Width	143.00 mm / 5.63 in
Depth	82.50 mm / 3.25 in
Shape	Round
Outer Lens Material	Polycarbonate
Outer Lens Color	Clear
Housing Material	Aluminum
Housing Color	Gray
Bezel Color	Black
Retrofits	Bucket 5 3/4" Round Headlights (PAR46)
Minimum Operating Temperature	-40 °C / -40 °F
Maximum Operating Temperature	65 °C / 149 °F
Connector or Wiring	H4
Mating Connector	H4, AMP#172615-2
Product Weight	1.80 lbs / 0.82 kgs

PRODUCT DIMENSIONS

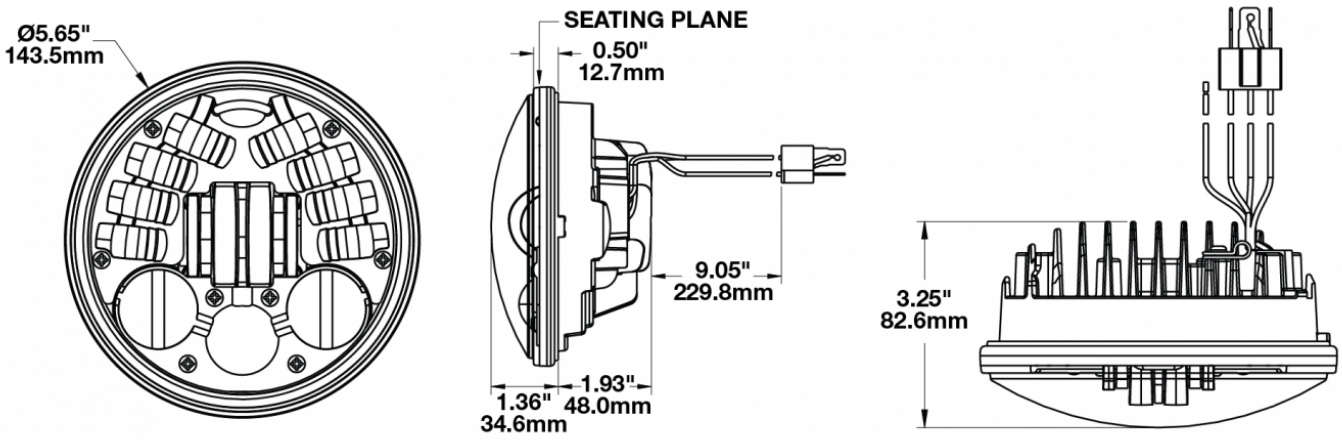

Print date: 2017-02-28

© 2017 J.W. Speaker Corporation • Germantown, WI U.S.A.

www.jwspeaker.com • speaker@jwspeaker.com • 262.251.6660

J.W. SPEAKER®
Engineered. Lighting. Solutions.

Adaptive LED Headlights - Model 8690 Adaptive

ELECTRICAL SPECIFICATIONS

Input Voltage	12V DC
Operating Voltage	9-16V DC
Transient Spike Protection	150V Peak @ 1 HZ-100 Pulses
Black Wire	Ground
White Wire	High Beam
Yellow Wire	Low Beam
Red Wire	Front Position
Current Draw	1.9A @ 12V DC (Low Beam) 3.2A @ 12V DC (High Beam) .21A @ 12V DC (Front Position) 4.2A @ 12V DC (Low Beam at Full Lean)

REGULATORY STANDARDS COMPLIANCE

Buy America Standards
ECE Reg 50
FMVSS 108 Table XX
SAE J575
ECE Reg 113 Class D
Eco Friendly
IEC IP67
SAE J584

© 2017 J.W. Speaker Corporation • Germantown, WI U.S.A.
www.jwspeaker.com • speaker@jwspeaker.com • 262.251.6660

J.W. SPEAKER®
Engineered. Lighting. Solutions.

Adaptive LED Headlights - Model 8690 Adaptive

PHOTOMETRIC SPECIFICATIONS

Raw Lumen Output	3,520 (High Beam); 2,120 (Low Beam)
Effective Lumen Output	1,600 (High Beam); 1050 (Low Beam)
Candela Output	60,000 (High Beam); 8,300 (Low Beam
Nominal LED Color Temperature	5000 K
Beam Pattern(s)	Forward Lighting - High Beam (DOT/ECE) Forward Lighting - Low Beam (DOT/ECE) Signalization - Front Position

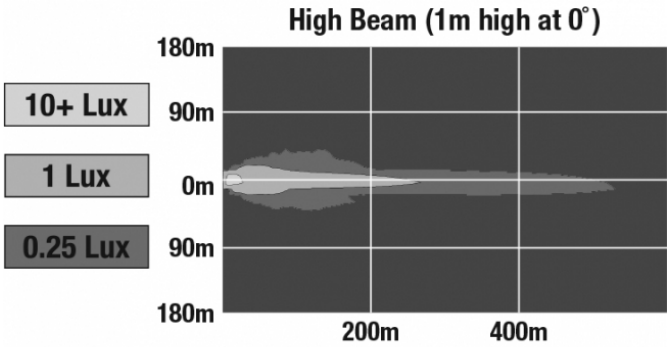

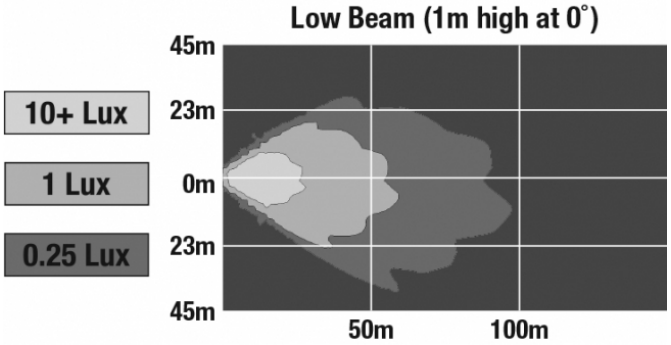

APPLICATIONS

ADDITIONAL INFORMATION

Headlight must be securely mounted and properly aimed such that the beam pattern cut off line complies with all applicable regulations. If you are not familiar with the legal requirements for aiming your headlights, please see a professional service provider. We recommend that headlights are aimed with a headlight aiming system for proper alignment.

Note about Front Position: The front position light is a requirement outside the United States. **If your bike is operated in the United States you do NOT need to connect this wire (red)** unless your bike is equipped with a front position light.

Print date: 2017-02-28
© 2017 J.W. Speaker Corporation • Germantown, WI U.S.A.
www.jwspeaker.com • speaker@jwspeaker.com • 262.251.6660

J.W. SPEAKER®
Engineered. Lighting. Solutions.

Adaptive LED Headlights - Model 8690 Adaptive

RELATED PRODUCTS

Part Number 0551741
12V DOT/ECE LED High & Low Beam Adaptive Headlight with Chrome Inner Bezel

© 2017 J.W. Speaker Corporation • Germantown, WI U.S.A.
www.jwspeaker.com • speaker@jwspeaker.com • 262.251.6660