LED Headlights - Model 90

PRODUCT INFORMATION

Description	12-24V DOT/ECE LED High Beam Headlight
Height	108.46 mm / 4.27 in
Width	108.46 mm / 4.27 in
Depth	90.42 mm / 3.56 in
Shape	Round
Outer Lens Material	Polycarbonate
Outer Lens Color	Clear
Housing Material	Die-Cast Aluminum
Housing Color	Black
Mounting Hardware Description	(x3) Ball & Socket
Mounting Type	Low Profile Mount
Minimum Operating Temperature	-40 °C / -40 °F
Maximum Operating Temperature	65 °C / 149 °F
Connector or Wiring	6" Bare Leads
Product Weight	1.30 lbs / 0.59 kgs

PRODUCT DIMENSIONS

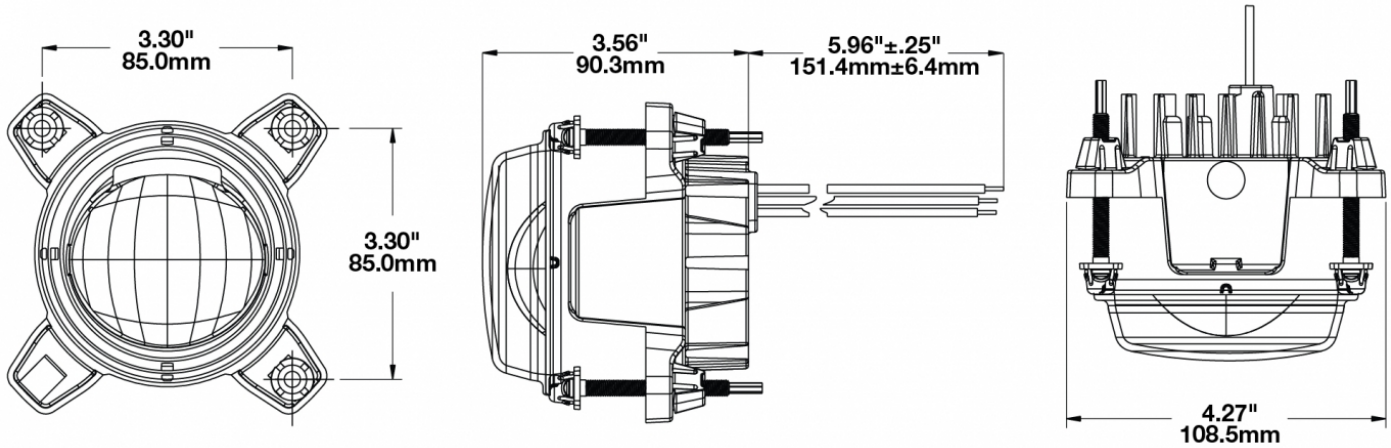

Print date: 2017-01-24

© 2017 J.W. Speaker Corporation • Germantown, WI U.S.A.

www.jwspeaker.com • speaker@jwspeaker.com • 262.251.6660

J.W. SPEAKER®
Engineered. Lighting. Solutions.

LED Headlights - Model 90

ELECTRICAL SPECIFICATIONS

Input Voltage	12-24V DC
Operating Voltage	10.5-38V DC
Transient Spike Protection	150V Peak @ 1 HZ-100 Pulses
Red Wire	Positive
Black Wire	Negative
White Wire	Front Position
Current Draw	0.80A @ 12V DC (High Beam) 0.40A @ 24V DC (High Beam) 0.40A @ 12V DC (Front Position) 0.20A @ 24V DC (Front Position)

REGULATORY STANDARDS COMPLIANCE

Buy America Standards	ECE Reg 112
ECE Reg 7	Eco Friendly
FMVSS 108 Table XVIII	IEC IP67

PHOTOMETRIC SPECIFICATIONS

Raw Lumen Output	630
Effective Lumen Output	230
Candela Output	45,000
Nominal LED Color Temperature	5000 K
Beam Pattern(s)	Forward Lighting - High Beam (DOT/ECE) Signalization - Front Position

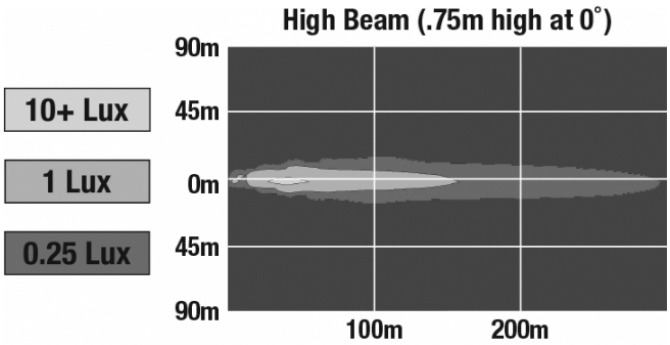

© 2017 J.W. Speaker Corporation • Germantown, WI U.S.A.
www.jwspeaker.com • speaker@jwspeaker.com • 262.251.6660

J.W. SPEAKER®
Engineered. Lighting. Solutions.

LED Headlights - Model 90

APPLICATIONS

ADDITIONAL INFORMATION

Headlight must be securely mounted and properly aimed such that the beam pattern cut off line complies with all applicable regulations. If you are not familiar with the legal requirements for aiming your headlights, please see a professional service provider. We recommend that headlights are aimed with a headlight aiming system for proper alignment.

ACCESSORIES

Part Number 8200111
Model 90 Replacement Adjuster Kit

© 2017 J.W. Speaker Corporation • Germantown, WI U.S.A.
www.jwspeaker.com • speaker@jwspeaker.com • 262.251.6660

J.W. SPEAKER®
Engineered. Lighting. Solutions.

LED Headlights - Model 90

RELATED PRODUCTS

Part Number 0551201
12-24V ECE LED LHT Low Beam Headlight

Part Number 0551211
12-24V DOT/ECE LED RHT Low Beam Headlight

Part Number 0551221
12-24V DOT/ECE LED Symmetrical Low Beam Headlight

Part Number 0553053
12-24V DOT/ECE LED Low Beam Headlight (for John Deere 6R, 7R & 8R Series Tractors) - 2 Light Kit

© 2017 J.W. Speaker Corporation • Germantown, WI U.S.A.
www.jwspeaker.com • speaker@jwspeaker.com • 262.251.6660

J.W. SPEAKER®
Engineered. Lighting. Solutions.